CA 2003 Resistance thermometer

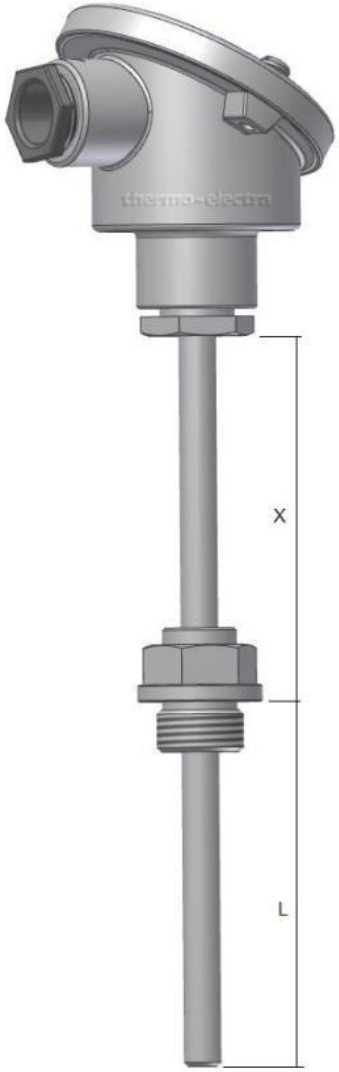

Protection tube	
Construction	Closed-end tube
Diameter	9.0mm standard, other diameters possible
Material	SS 316 - (Wst 1.4401) standard, other materials possible
Insertion length	Customer to specify
Process connection	1/2"BSP (G1/2") standard, M20x1.5, 1/2"NPT or other threads possible
Extension length	Customer to specify
Connection head	
Material	Aluminium, plastic or stainless steel
Cable entry	M20x1.5 cable gland standard, other threads possible
Measuring insert	
Type	MI 2025
Construction	Replaceable springloaded, 6mm standard, other diameters possible
Length	E = L + X + 35 mm
Material	SS 316 - (Wst 1.4401) standard, other materials possible
Sensor	
	Single or Duplex Pt100
Accuracy	According IEC 60751 Cl. B, A or AA
Style / Connection	3-wire system standard, 4-wire system optional
Range	-20 / +400°C standard, -220 / +600°C optional
Options	
Transmitter 4-20mA	In-Head Transmitter, standard or Explosion proof. Please select from our standard range, see
Swing-Cover head	DAN transmitter direct mounted on measuring insert
High Swing-Cover head	DAN-H, transmitter in cover, insert with ceramic block

Ordering code

*This datasheet is purely indicative, build-up of model code may vary from this datasheet.

Model	CA 2003						

Sensor (S or D)

Connection 3- or 4-wire

Class B, A or AA

Length "L" in mm

Length "X" in mm

Diameter "D" in mm

H2-1 Rev.0 7/07

thermo-electra
temperature sensor solutions

Thermo Electra B.V.
Weteringweg 10
2641KM Pijnacker
The Netherlands

Phone +31 (0)15 - 3621200
Fax +31 (0)15 - 3694082
Email sales@thermo.nl
http://www.thermo-electra.com